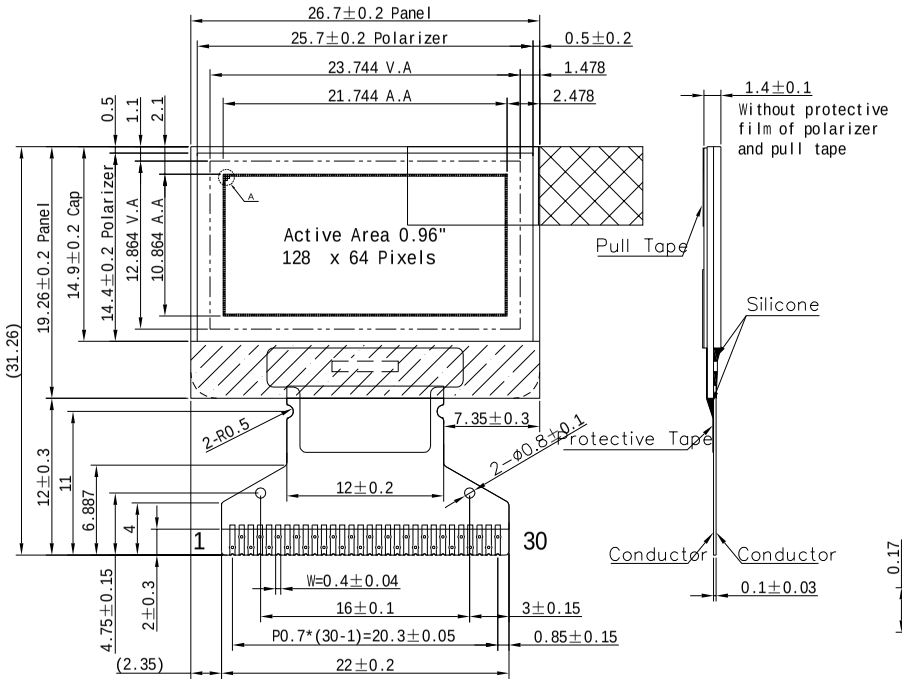

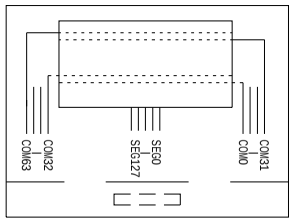

Com & Seg layout

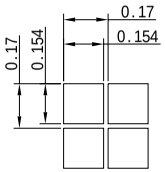

Detail A (20:1)

Pin NO.	Assignment SYMBOL
1	NC
2	C2P
3	C2N
4	C1P
5	C1N
6	VBAT
7	NC
8	VSS
9	VDD
10	BS0
11	BS1
12	BS2
13	CS#
14	RES#
15	D/C#
16	R/W#
17	E/RD#
18	D0
19	D1
20	D2
21	D3
22	D4
23	D5
24	D6
25	D7
26	IREF
27	VCOMH
28	VCC
29	VLSS
30	NC

Notes:

1. Color: White
2. Driver IC: SSD1306
3. Operate temp.: -40℃~70℃
   Storage temp.: -40℃~85℃
4. Interface: all
5. General Tolerance: ±0.30
6. RoHS Compliant

ITEMS		CONTENT	DATE
MODIFICATION:	4		
	3		
	2		
	1		

DISTAR TECHNOLOGY LIMITED

CUSTOMER P/N:	MODEL: OLED12864-03-LF-01	
DRAWN BY: WPY 2015-12-15		UNITS: mm
CHECKED By: XQC 2015-12-15		SHEET: 1/1
DIMENSION TOLERANCE :	±0.2 mm	REVISION :1