DSM12864-207A2

128 X 64 Dots 1/64duty 1/9bias

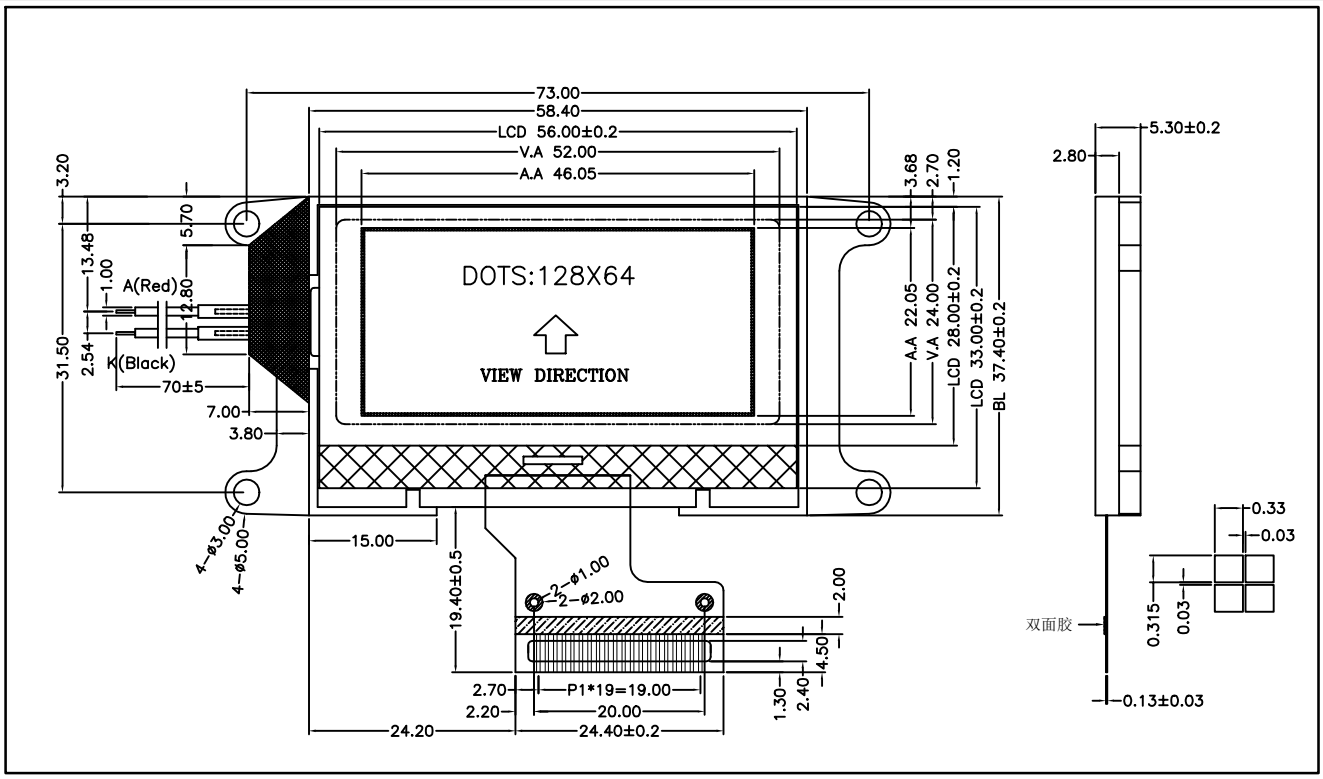

ABSOLUTE MAXIMUM RATINGS

Item	Symbol	Min.	Max.	Unit
Supply Voltage(Logic)	VDD	2.4	3.6	V
Supply Voltage(LCD)	V0-XV0	-0.3	16.0	V
Input Voltage	Vi	-0.3	VDD+0.3	V
Operating Temp.	Topr	-10	60	℃
Storage Temp.	Tstg	-20	70	℃

MECHANICAL DATA

Item	Max.	Unit
Module Size (W X H X T)	78 X 31.5 X 5.3	mm
Viewing Area(W X H)	52 X 24	mm
Dot Pitch(W X H)	0.36 X 0.345	mm
Dot Size(W X H)	0.33 X 0.315	mm
View Angle	6 O'Clock	

ELECTRICAL CHARACTERISTICS (Vdd=3.0V±0.3V)

Item	Symbol	Test Condition	Min.	Typ.	Max.	Unit
Input High Voltage	Vih	--	0.8VDD	--	VDD	V
Input Low Voltage	Vil	--	VSS	--	0.2VDD	V
Output High Voltage	Voh	--	0.8VDD	--	VDD	V
Output Low Voltage	Vol	--	VSS	--	0.2VDD	V
Current consumption	Idd	Vdd=3.0V	--	135	205	μA
LCD Driving Voltage	V0	Ta=25℃	--	9.6	--	V

PIN CONNECTIONS

Pin	Symbol	Function
1	/CS	Chip select pin
2	/RST	Reset signal input
3	A0	"L": Control data "H": Display data
4	SCL	Serial clock input.
5	SDA	Serial data input.
6	VDD	Power Supply Voltage(+3.0V)
7	GND	Ground
8	NC	
9	NC	
10	V0	LCD driving voltage for common
11	XV0	LCD driving voltage for common
12	NC	
13	NC	
14	VG	LCD driving voltage for segment
15~20	NC	

BLOCK DIAGRAM

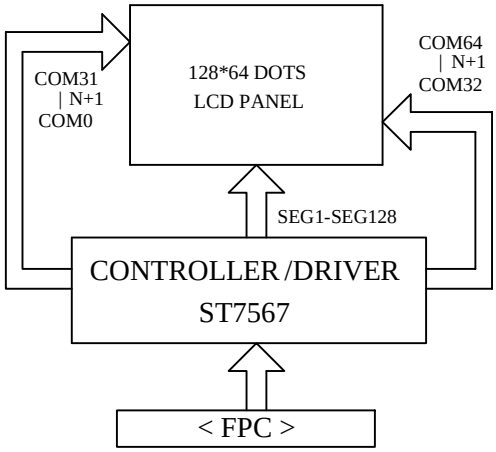

Display Type

LCD	Blacklight
STN/Y-G	Green
Transmissive	3.0V , 15mA