DSM240160-03D

240 X 160 Dots 1/160duty 1/12bias

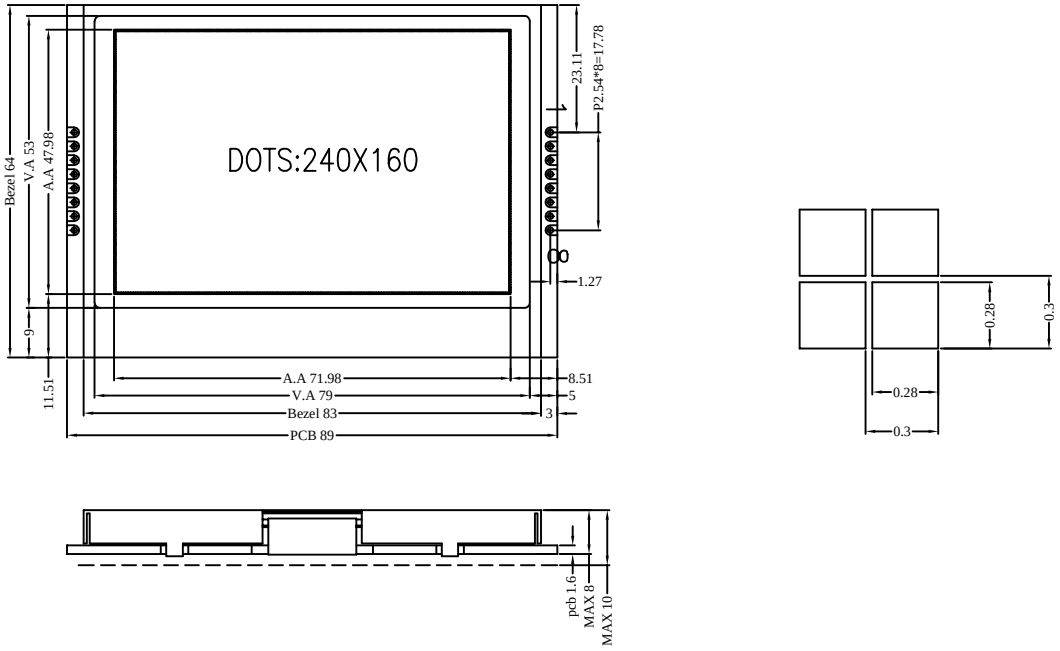

ABSOLUTE MAXIMUM RATINGS

Item	Symbol	Min.	Max.	Unit
Supply Voltage(Logic)	Vdd - Vss	-0.3	4.0	V
Supply Voltage(LCD)	Vlcd	-0.3	18.0	V
Input Voltage	Vi	-0.4	Vdd + 0.5	V
Operating Temp.	Topr	-20	70	℃
Storage Temp.	Tstg	-30	80	℃

MECHANICAL DATA

Item	Max.	Unit
Module Size (W X H X T)	89.0 X 64.0 X 10.0	mm
Viewing Area(W X H)	79.0 X 53.0	mm
Dot Pitch(W X H)	0.30 X 0.30	mm
Dot Size(W X H)	0.28 X 0.28	mm
View Angle	6 O'Clock	

ELECTRICAL CHARACTERISTICS (Vdd=3.0V±0.3V)

Item	Symbol	Test Condition	Min.	Typ.	Max.	Unit
Input High Voltage	Vih	--	0.8Vdd	--	--	V
Input Low Voltage	Vil	--	--	--	0.2Vdd	V
Output High Voltage	Voh	--	0.8Vdd	--	--	V
Output Low Voltage	Vol	--	--	--	0.2Vdd	V
Current consumption	Idd	Vdd=3.0V	--	725	1087	μ A
LCD Driving Voltage	V0	Ta=25 ℃	--	16.0	--	V

PIN CONNECTIONS

Pin	Symbol	Function
1	XCS	Chip select pin
2	RST	Reset signal input
3	A0	"L": Control data; "H":Display data
4	SCK	Serial Clock input
5	SDA	Serial data input
6	VDD	Power Supply for Logic(+3.3V)
7	LEDA	Power Supply for Backlight(+3.3V)
8	VSS	Ground

BLOCK DIAGRAM

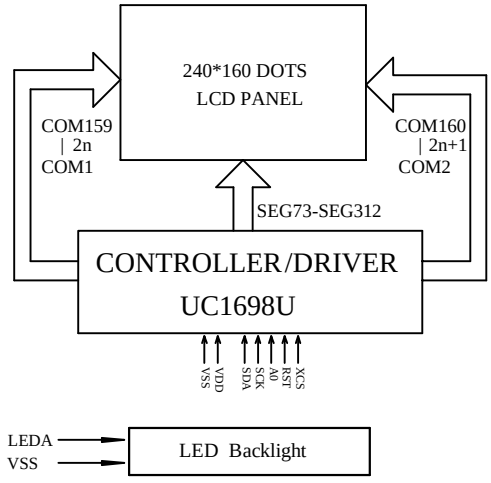

LCD Type

LCD Color	Blacklight
STN/Blue/Transmissive	LED/WHITE